REV.	DESCRIPTION	DRAWN	DATE
2	Revised shape & color	FROS	2020/05/27
2.1	Revise 12.55->12.40, add glue in magnet hole	FROS	2020/05/29
3	ECR221031001	TIM	2022/10/31

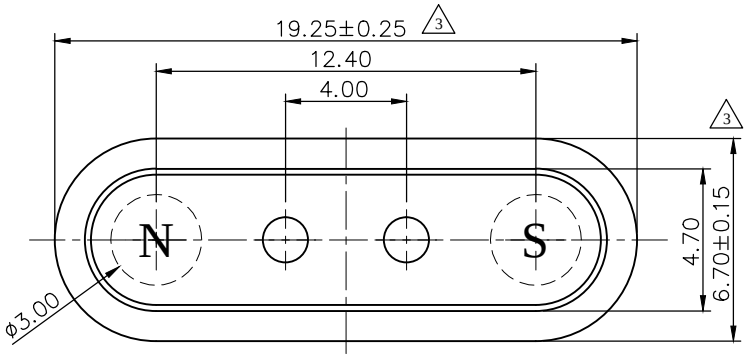

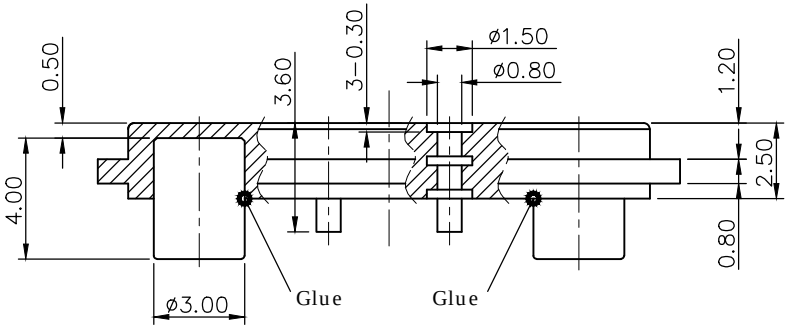

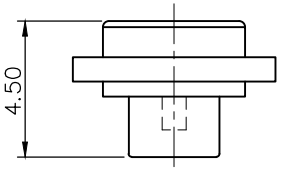

SPECIFICATION:

1. ELECTRICAL
1.1 Current Rating: 2A per pin
1.2 Voltage Rating: 5VDC
1.3 Contact Resistance: 50mΩ
1.4 Insulation Resistance: 500MΩ
1.5 Dielectric Withstanding Voltage: 500VAC

2. MECHANICAL
2.1 Durability: 10,000 Cycle
2.2 Pin Strength: 9.8N min.
2.3 Pin Pulling off Force: 4.9N min.

3. ENVIRONMENTAL
3.1 Operating temperature range: -30°C~+85°C
3.2 Storage temperature range: -30°C~+85°C

4. SOLDER ABILITY
4.1 Recommended IR-Reflow (Wave Soldering) Temperature: 260°C

NO.	PART NAME	DESCRIPTION
3	Magnet	N52, Φ3X4.0, 200u" min. nickel plating, 3600±10% GS
2	Housing	Nylon PA46, UL94V-0, white color
1	Machine Pin	Brass C3604, 3u" min. gold plating over 50-120u" min. nickel plating

UNLESS OTHERWISE SPECIFIED TOLERANCE

UNIT:	DECIMAL	LINEAR	ANGLES
mm	X.	±0.50	±5°
	X.X	±0.25	±3°
	X.XX	±0.12	±1°

ATTEND
www.attend.com.tw

DRAWN	Fros	2020/03/18
CHECKED	Tim	2020/03/18
APPROVED	Ken	2020/03/18

DRAWN NAME: Pogo Machine Pin, Water proof, Magnet Type H=4.5mm, Pitch 4.0, DIP, 3u", White color

SCALE	SHEET	SIZE
4/1	1/1	A4

PRODUCT NO. 303C-C4515-40-02
FILE NAME 303C-C4515-40-02_B_3

Alcom electronics
Singel 3 | B-2550 Kontich | Belgium | Tel. +32 (0)3 458 30 33 | info@alcom.be | www.alcom.be
Rivium 1e straat 52 | 2909 LE Capelle aan den Ijssel | The Netherlands | Tel. +31 (0)10 288 25 00 | info@alcom.nl | www.alcom.nl